Service kit TT
Pos
14.20
28.00
28.04
28.20
38.00
43.01
64.08
64.12
64.16
63.00
64.20
64.22*
64.40*
64.41*
66.00

*Quando presente
When available

Service kit TM
Pos
14.20
28.00
28.04
28.20
36.00
63.00
64.20
66.00

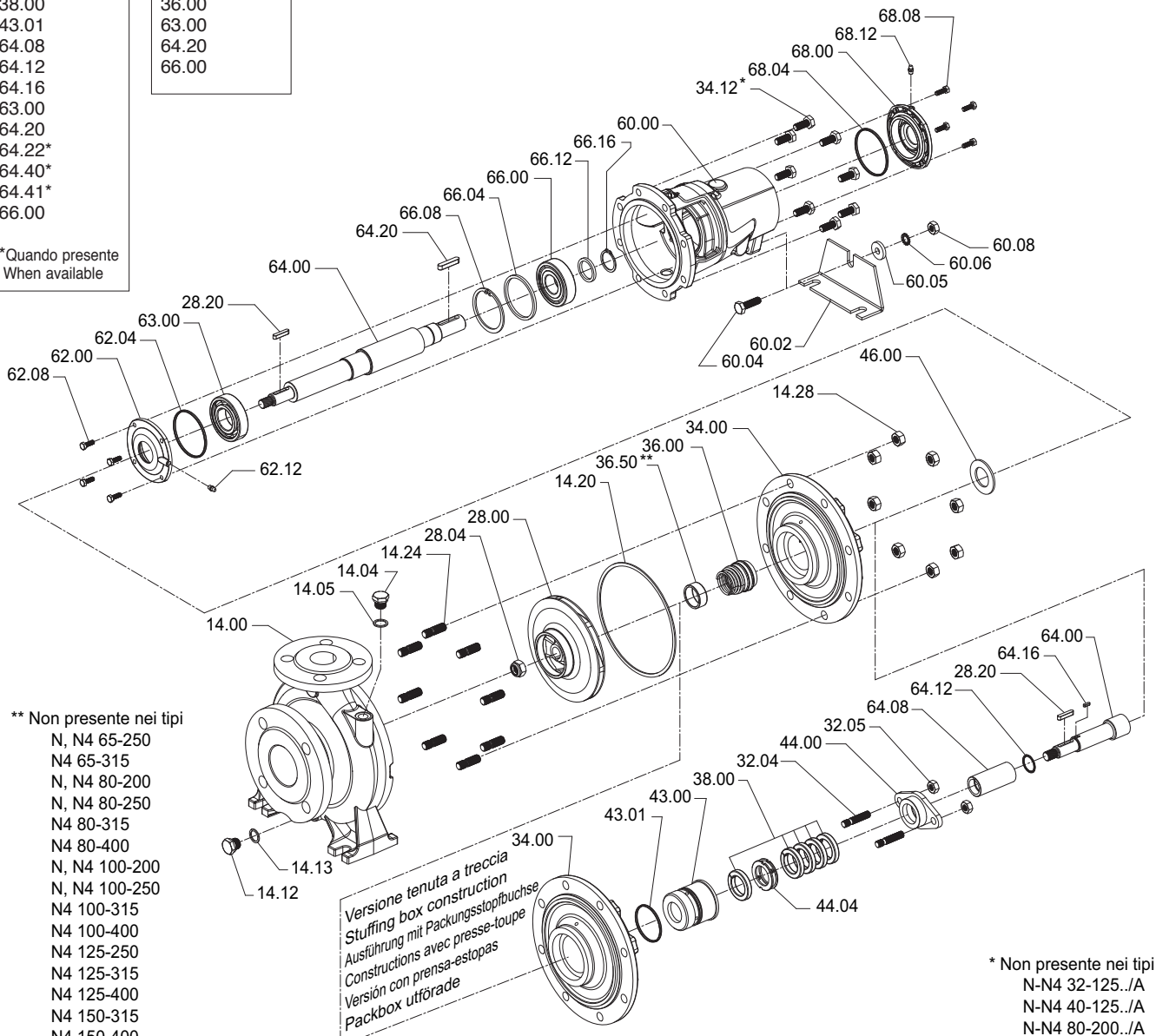

** Non presente nei tipi
N, N4 65-250
N4 65-315
N, N4 80-200
N, N4 80-250
N4 80-315
N4 80-400
N, N4 100-200
N, N4 100-250
N4 100-315
N4 100-400
N4 125-250
N4 125-315
N4 125-400
N4 150-315
N4 150-400

* Non presente nei tipi
N-N4 32-125../A
N-N4 40-125../A
N-N4 80-200../A